PARTS LIST & DIAGRAM FOR:

PROFESSIONAL UNDERBODY COATING GUN

Model: **AK42**

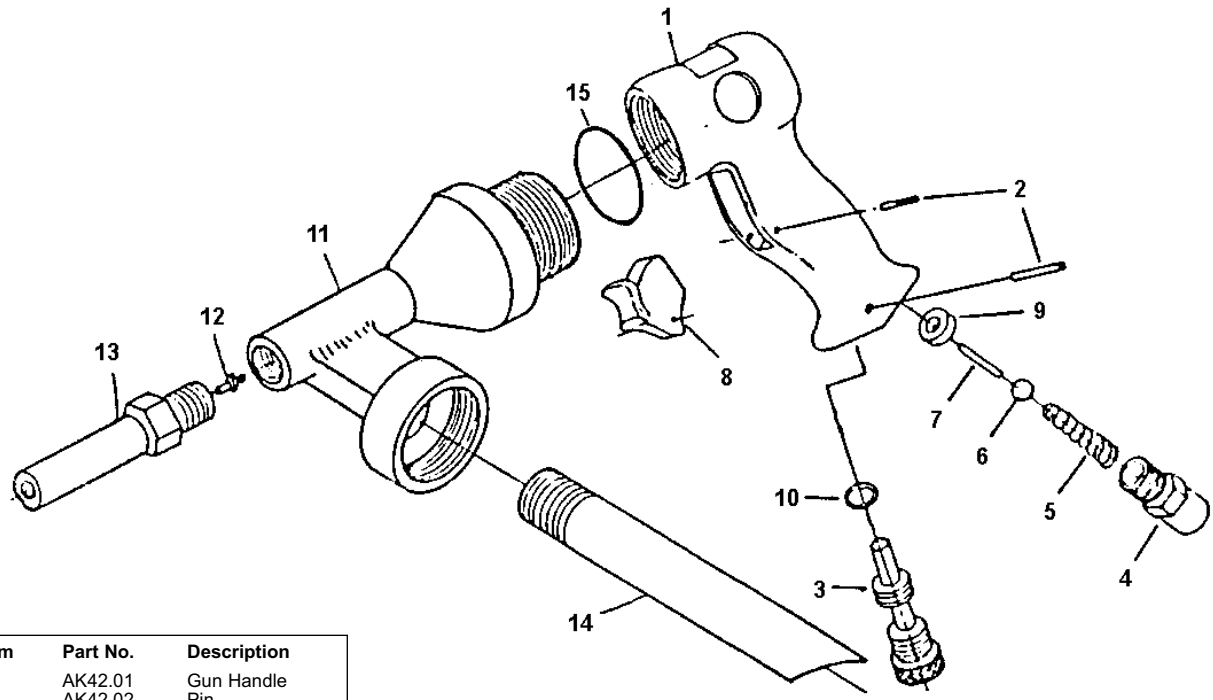

Item	Part No.	Description
1	AK42.01	Gun Handle
2	AK42.02	Pin
3	AK42.03	Regulator
4	AK42.04	Air Inlet
5	AK42.05	Valve Spring
6	AK42.06	Valve Ball
7	AK42.07	Valve Stem
8	AK42.08	Trigger
9	AK42.09	Ball Seat
10	AK42.10	O-Ring
11	AK42.11	Gun Body
12	AK42.12	Air Nose
13	AK42.13	Gun Nose
14	AK42.14	Suction Tube
15	AK42.15	O-Ring

Issue :	1
Date:	200202

Sole UK Distributor,
Sealey Group,
Bury St. Edmunds, Suffolk.

01284 757500 *01284 703534* ***E-mail:*** *sales@sealey.co.uk*